bonettievolution srl
via Monte Pasubio 199
36010 ZANÉ (VI)
Tel. 0445 540653
p.iva 04358330241
info@bonettievolution.com
www.bonettievolution.com

HA52 I=(...) PAM 90 B5 (200*24) 30 MM

Valori espressi in [mm]

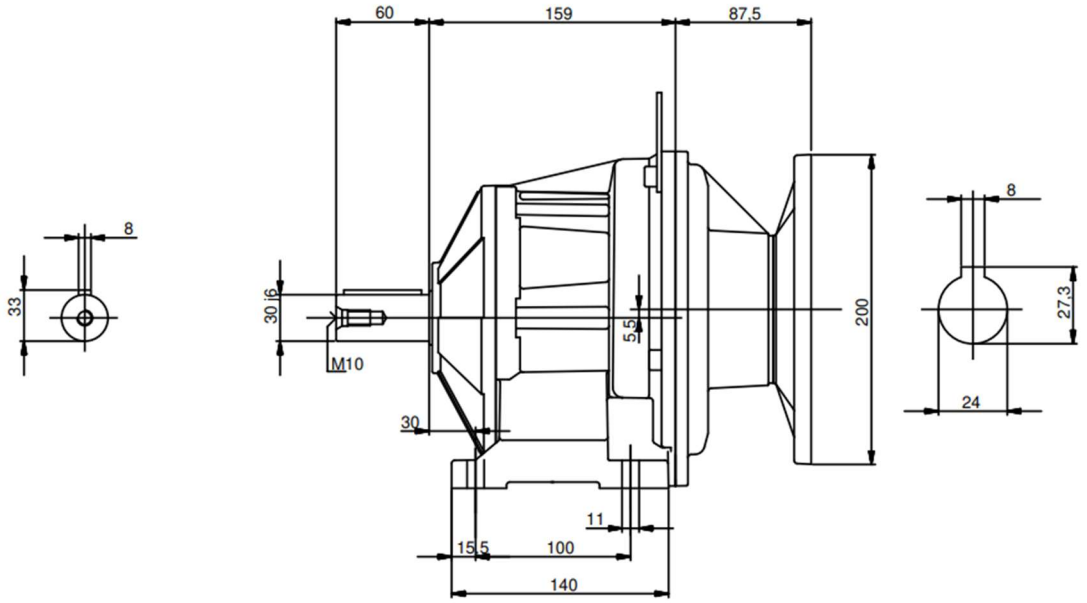
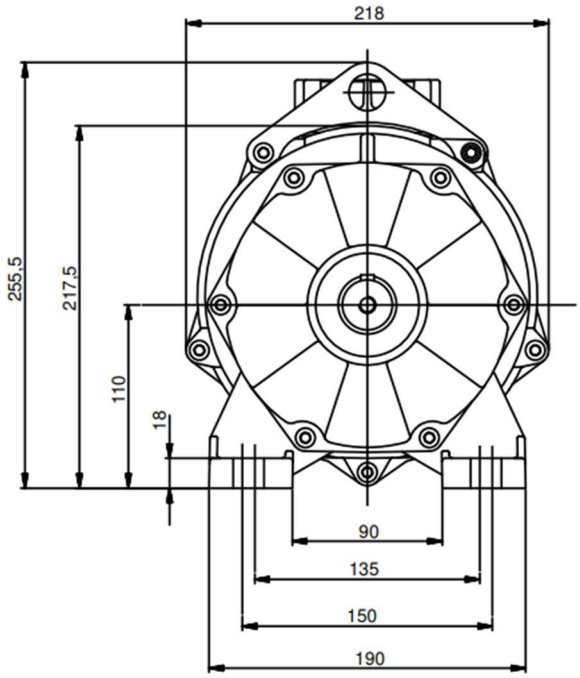
bonettievolution srl
via Monte Pasubio 199
36010 ZANÉ (VI)
Tel. 0445 540653
p.iva 04358330241
info@bonettievolution.com
www.bonettievolution.com